Round 1 - Thursday, August 4, 2022

SHOTLINK

Wyndham Championship

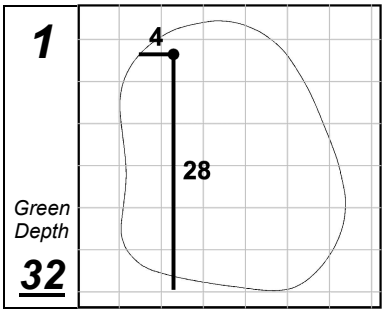

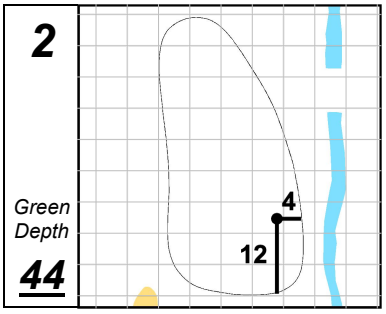

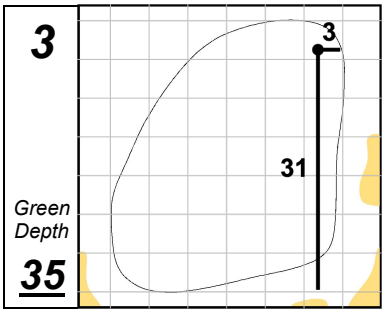

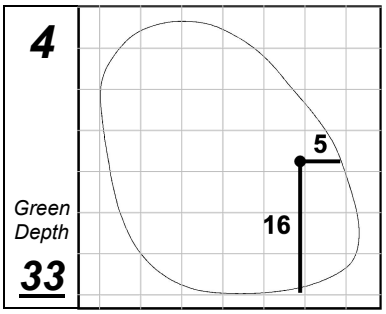

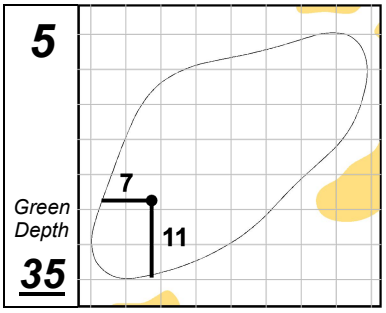

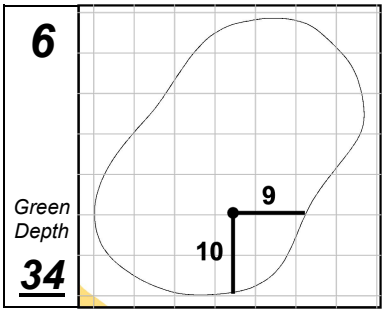

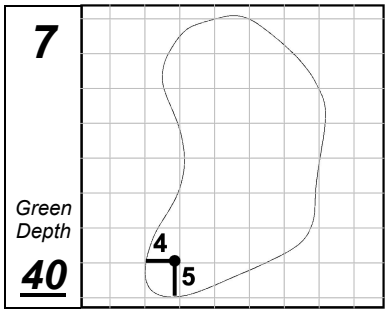

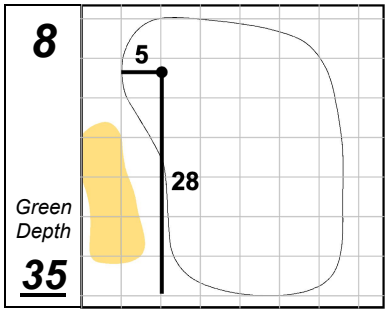

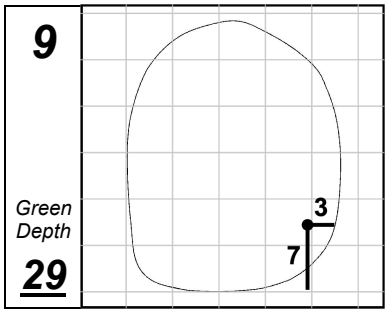

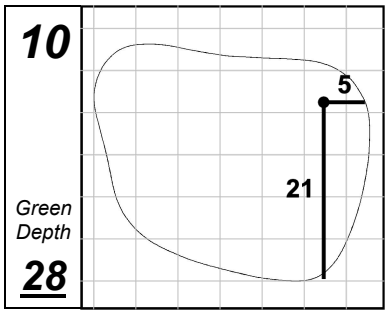

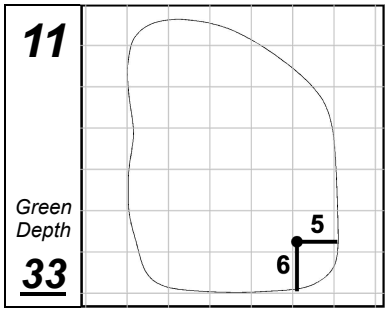

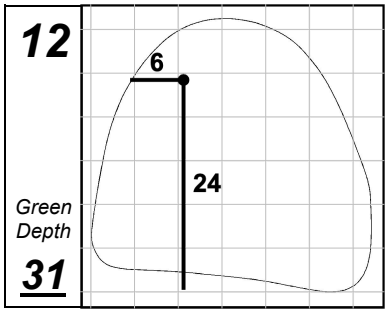

Sedgefield Country Club

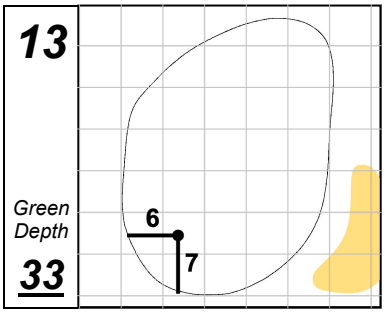

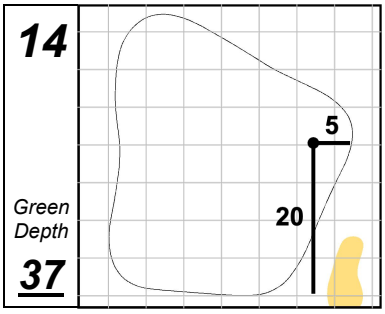

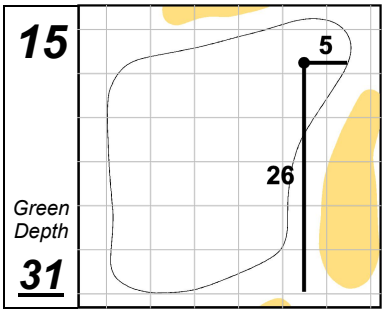

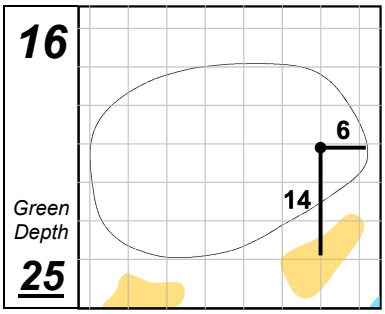

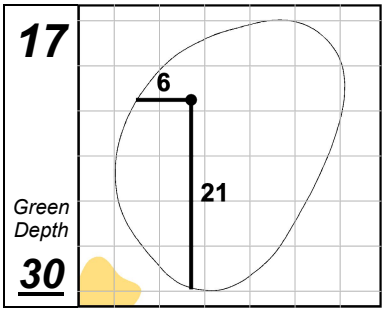

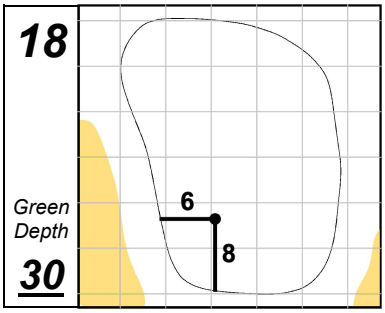

Each side of a complete square on the green represents 5 YARDS.

Wednesday, August 3, 2022 9:08:37 AM